Electrolux PROFESSIONAL

ITEM #

MODEL #

NAME #

SIS #

AIA #

ecostore
2 Door Digital Refrigerator, 1430lt (-2 +10) - Remote (CO2)

725244 (REX142FRRCO2) 2-door Refrigerator 1430lt, -2+10°C, digital, AISI 304, remote, CO2 with valve

Short Form Specification

Item No.

Two full door refrigerator with internal and external structure in 304 AISI stainless steel; external back panel in galvanized steel and bottom panel in anti-corrosive material. Digital control with cabinet temperature display and setting and manual activation of defrost cycle. Fully compliant HACCP digital controls include visible alarms. Optimized back to front forced air flow provides even temperature distribution and fast cooling in any conditions. Fitted with 75 mm-thick cyclopentane insulating foam. Door features lock and door microswitch to switch off the fan when the door is opened. Hidden evaporator to guarantee higher storage capacity and less corrosion problems. Remote refrigeration unit; CO2 refrigerant with valve; ventilated operation; automatic defrost and evaporation of defrost water.

APPROVAL:

Main Features

- Two full doors.
- Digital control with cabinet temperature display and setting and manual activation of defrost cycle. Fully compliant HACCP digital controls include visible alarms.
- Large storage area suitable to contain 2/1 GN grids or shelves on anti-tilt runners.
- Optimized back to front forced air flow provide even temperature distribution and fast cooling in any conditions.
- Automatic defrost.
- Internal structure with numerous charging positions available to host grids, ensuring higher net capacity and a greater storage space.
- Operating temperature can be adjusted from -2 to +10 °C to suit different food storage requirements.
- Cabinet fitted with up to 75 mm thickness of cyclopentane insulation for best insulating performance with 100% environmental protection (thermal conductivity: 0,020 W/m*K).
- 60 mm-thick insulation covering the evaporator can be easily removed with a single operation.
- Rilsan coated grids for improved protection.
- Hidden evaporator thus guaranteeing higher storage capacity and less corrosion problems.
- Connectivity ready for real time access to connected appliances from remote and data monitoring (requires optional accessory).
- Integrated RS485 port to facilitate connection to a remote computer and integrated HACCP systems.
- Tropicalized unit.

Construction

- Constructed from the highest quality AISI 304 Stainless steel.
- Interior base with rounded corners, pressed from a single sheet.
- Stainless steel runners and supports easily disassembled.
- Anti-corrosion bottom avoids any damage that may be caused to the cabinet by aggressive detergents employed to clean the floors.
- Easy access to the main components for maintenance.
- Lockable door.
- Doors are self-closing and can be fully opened up to 180°.
- Mounted on adjustable Stainless steel feet, with castors as an option.
- Remote refrigeration unit.
- The rounded internal corners, the easily removable runners and grids allow for ease of cleaning and high hygiene standards.
- Solenoid valve included.

Sustainability

- Door switch stops the fan when door is opened to avoid cold air exiting the cell, thus saving energy.

- CFC and HCFC-free insulation.
- Removable triple-chamber balloon magnetic gasket to improve insulation and reduce energy consumption and ease of cleaning.

Included Accessories

• 6 of 2/1GN grey rilsan grid with 2 runners	PNC 881020	

Optional Accessories

• 2 stainless steel runners for refrigerated cabinets - (Marine)	PNC 880242	❑
• Set of 8 GN1/1 PVC containers for fish	PNC 880243	❑
• Spacer for 670 lt and 1430 lt refrigerated cabinets	PNC 880248	❑
• Kit 20 pair runners and tray supports to fit pastry trays (400x600mm)	PNC 880333	❑
• Ethernet connectivity kit IJF for Refrigeration	PNC 880685	❑
• 1/1GN plastic container with false bottom	PNC 880705	❑
• 2/1GN grey rilsan grid	PNC 881004	❑
• 2/1GN aisi 304 stainless steel grid	PNC 881016	❑
• 2/1GN 304 AISI stainless steel grid with 2 runners	PNC 881018	❑
• Meat rail for 670/1430lt refrigerators with 4 hooks	PNC 881019	❑
• 2/1GN grey rilsan grid with 2 runners	PNC 881020	❑
• Pedal opening for 1430lt refrigerator	PNC 881033	❑
• 2/1GN pvc container with lid and 2 runners	PNC 881039	❑
• 2/1GN perforated shelf	PNC 881042	❑
• 1/1GN rilsan steel wire basket h=150mm	PNC 881043	❑
• 3 grey rilsan central grids for 1430lt (not for glass door)	PNC 881044	❑
• 2/1GN grey rilsan basket+2 runners h=150mm	PNC 881047	❑
• 5 swivelling wheels (2 with brake), diam 125mm, for 1430 lt refrigerators, NOT for remote models	PNC 881294	❑

The company reserves the right to make modifications to the products without prior notice. All information correct at time of printing.

ecostore
2 Door Digital Refrigerator, 1430lt (-2 +10) - Remote (CO2)

Front

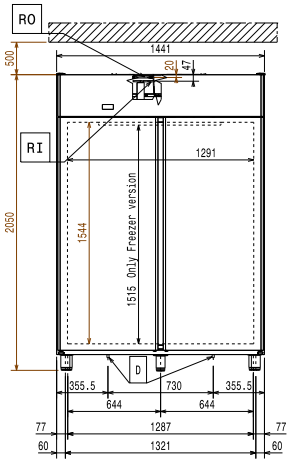

Side

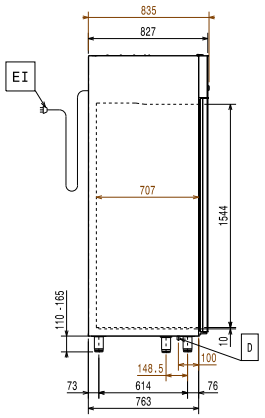

EI = Electrical inlet (power)
RI = Refrigerant Inlet
RO = Refrigerant Outlet

Top

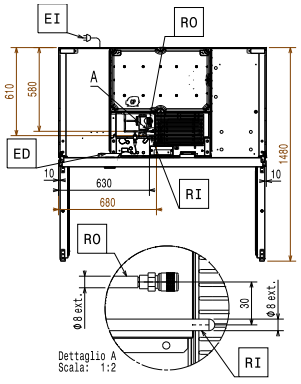

Electric

Supply voltage:	
725244 (REX142FRRCO2)	220-240 V/1 ph/50/60 Hz
Electrical power max.:	0.15 kW

Capacity:

Number and type of grids (included):	6 - GN 2/1

Key Information:

Gross capacity:	1430 lt
Door hinges:	1 Left+1 Right
External dimensions, Width:	1441 mm
External dimensions, Depth:	835 mm
External dimensions, Depth with Doors Open:	1430 mm
External dimensions, Height:	2050 mm
Number and type of doors:	2 Full
Type of external material:	304 AISI
Type of internal material:	304 AISI
Internal panels material:	304 AISI
Number of positions & pitch:	44; 30 mm

Refrigeration Data

Control type:	Digital
Refrigeration type:	R744
Suggested refrigeration power:	458 W
Condition at evaporation temperature:	-10 °C
Condition at condensation temperature:	55 °C
Condition at ambient temperature:	43 °C
Connection pipes (remote) - outlet:	9.5 mm
Connection pipes (remote) - inlet:	6 mm
***Note:**	Ref. Power calculated at a linear distance of 15 mt (piping)

ISO Certificates

ISO Standards:	ISO 9001; ISO 14001; ISO 45001; ISO 50001

The company reserves the right to make modifications to the products without prior notice. All information correct at time of printing.

2024.10.07